ALL SHOPS

DOOR WITH FRAME

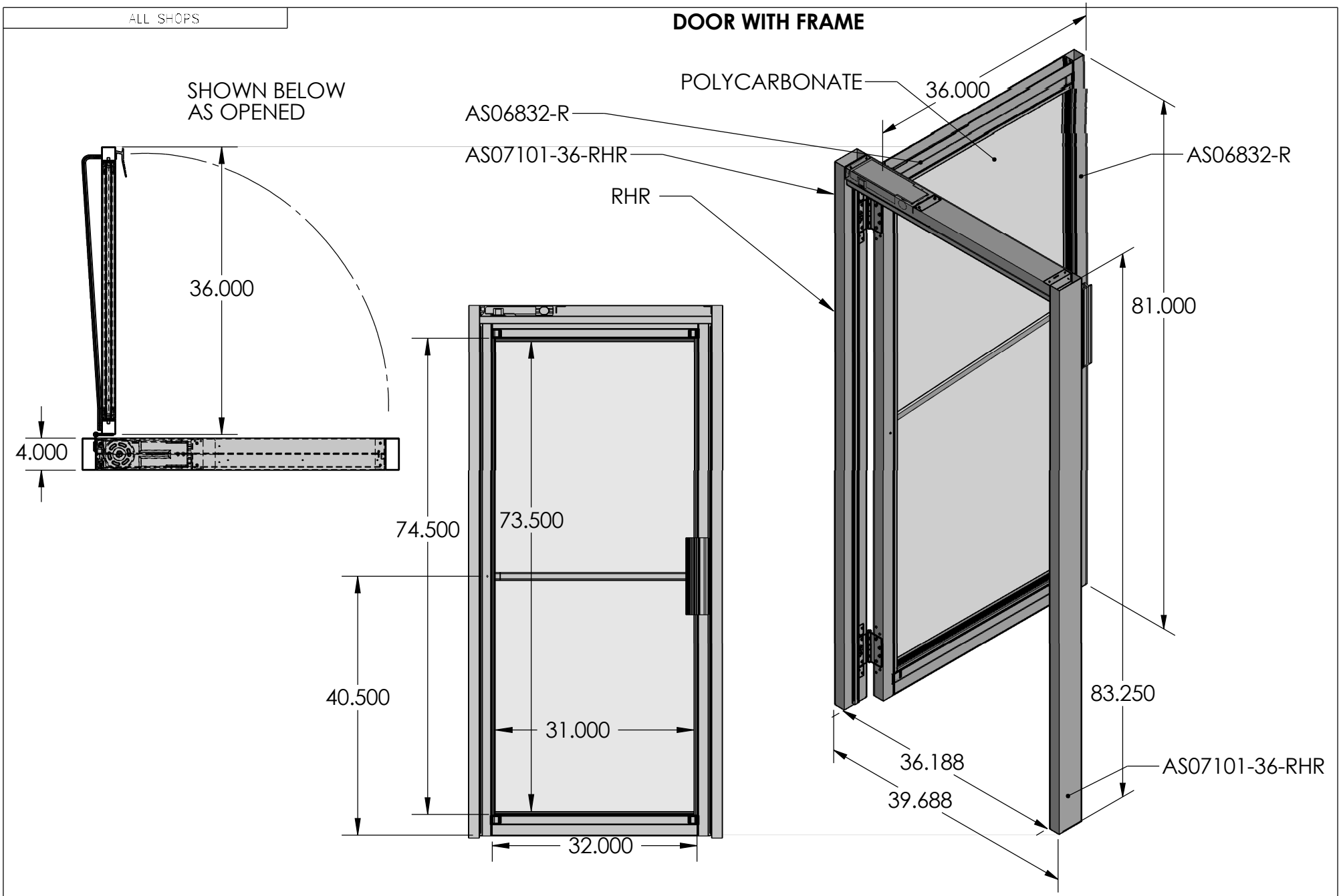

REVISIONS			
RV#	DESCRIPTION	DATE	BY
NC	INITIAL RELEASE	4-29-19	KT

MATERIAL SPEC.: ALUMINUM, POLYCARBONATE

FINISH SPEC.: CLEAR ANODIZED

UNLESS OTHERWISE SPECIFIED, DIMENSIONS ARE IN INCHES

TOLERANCES ON:

.XX DECIMALS ± .03 X° ± 1°

.XXX DECIMALS ± .010 X/X ± 1/64

SIGNATURES	DATE
ISSUED BY: KHANH TRAN	4-29-19
REF #: X	

Terra Universal

PROPRIETARY & CONFIDENTIAL
ALL RIGHTS RESERVED BY
TERRA UNIVERSAL
DISCLOSURE OR COPYING PROHIBITED

TITLE: DOOR, SINGLE; POLYCARBONATE PRE-HUNG ON ALUMINUM FRAME, 36"W x 81"H, RIGHT HAND REVERSE SWING

A | 6710-97-R

SCALE | SHEET 1 OF 2